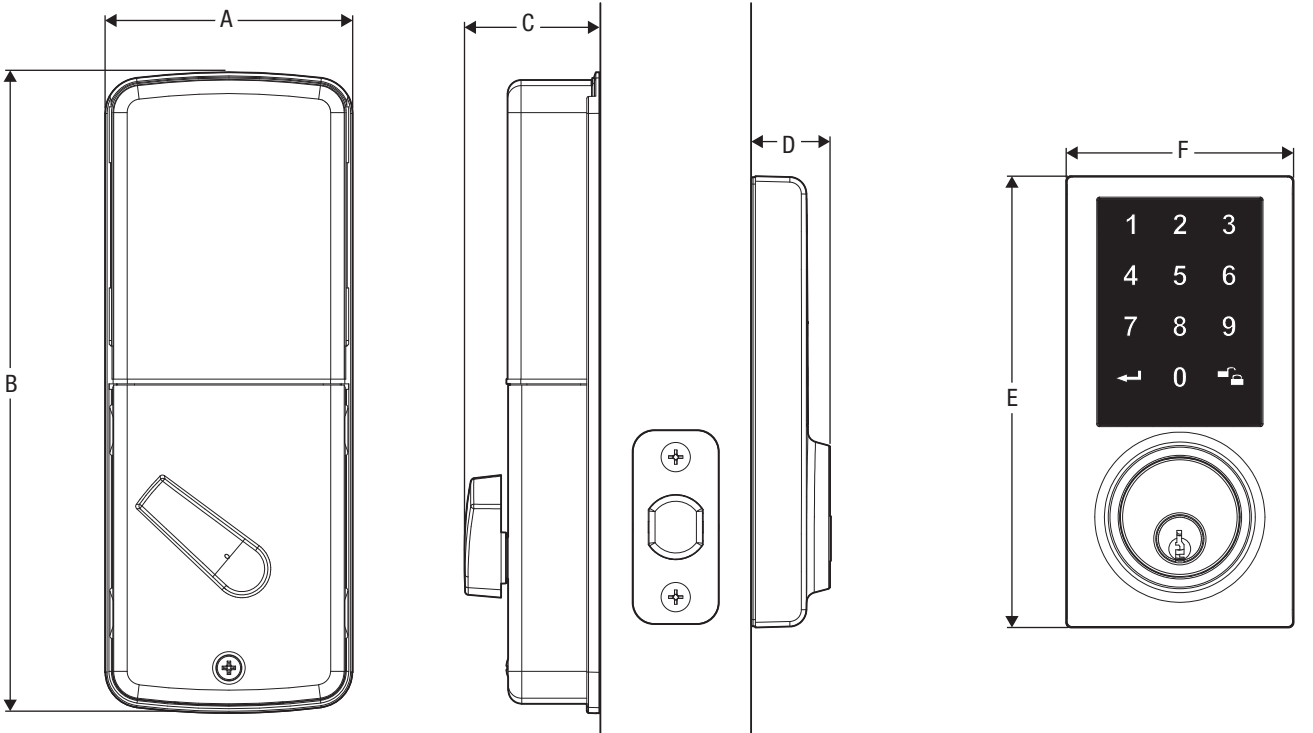

A = 2-5/8" (73 mm)
B = 7-7/16" (189 mm)
C = 1-9/16" (39.8 mm)
D = 15/16" (23.2 mm)
E = 5-1/4" (133 mm)
F = 2-21/32" (67 mm)