PARTS LIST FOR MODEL 650SSM

REEL ASSEMBLY NO. 1152068

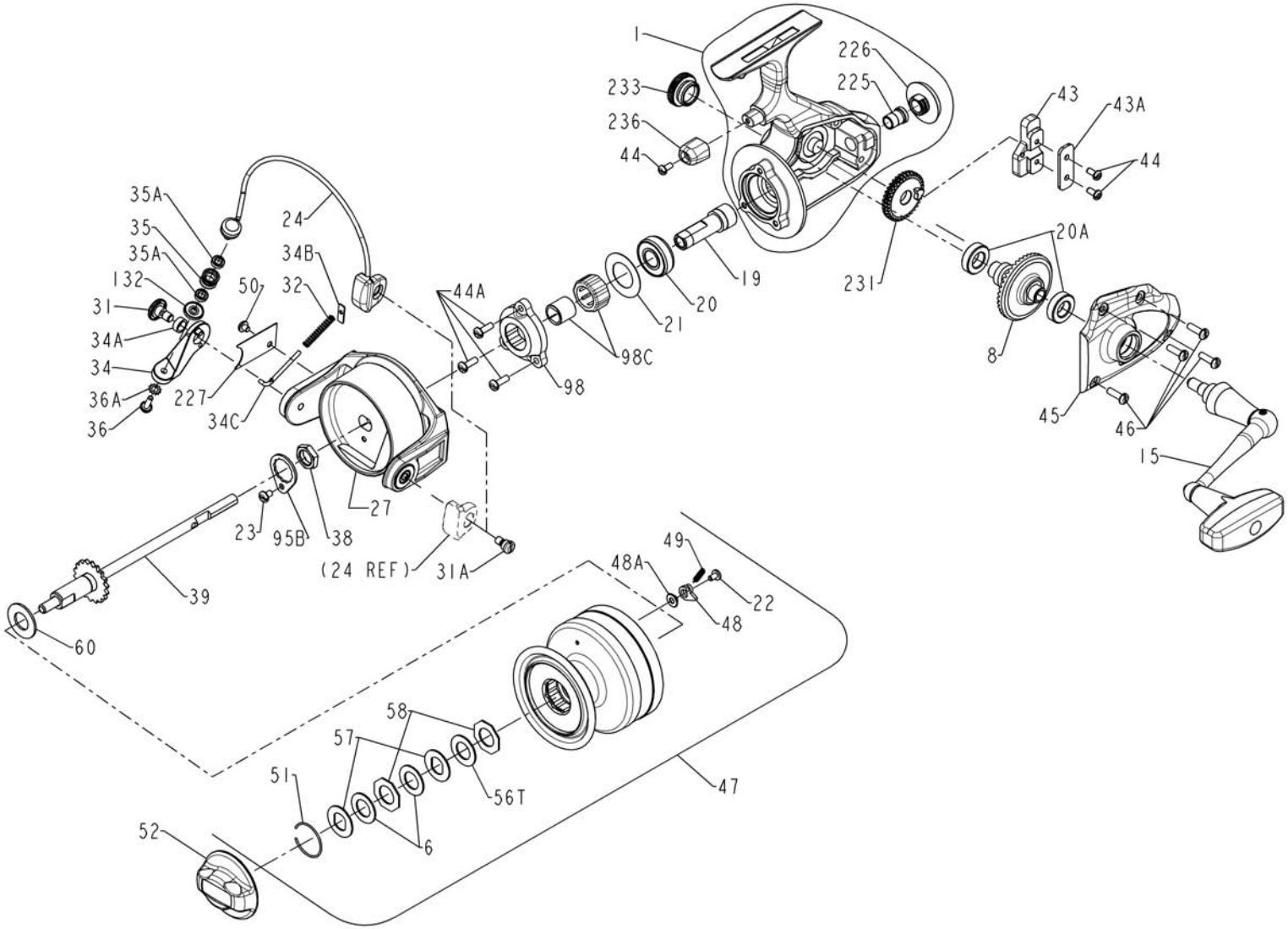

NOT ALL PARTS ARE AVAILABLE

KEY NO.	PENN STYLE NO.	ORDER PART NO.	DESCRIPTION
1	001 650M	1190841	Housing Assembly
6	006 155	1180915	Drag Washer HT-100 (2) Req.
8	008N6500	1181135	Main Gear Assembly
15	015N650M	1181491	Handle Assembly
19	019 650M	1181707	Pinion Gear
20	020 704	1181790	Ball Bearing
20A	020 6500	1181789	Ball Bearing (2) Req.
21	021 750M	1192639	Bearing Cover
22	048B750M	1186969	Spool Click Screw
23	023 750	1181953	Rotor Locking Plate Screw
24	024 650M	1182056	Bail Wire Assembly
27	027 650M	1182270	Rotor
31	031 750M	1182679	Bail Arm Screw
31A	031A550G	1182689	Bail Cam Screw
32	032 750M	1182740	Bail Spring
34	034 750M	1182833	Bail Arm
34A	034A750	1182847	Bail Arm Bushing
34B	034B750M	1182848	Pivot Plate
34C	034C750M	1191657	Pivot Arm
35	035 750M	1191677	Line Roller
35A	035A8500J	1182965	Ball Bearing (2) Req.
36	036 750	1183016	Bail Stud Screw
36A	036A750	1183032	Lock Washer
38	038 710	1183157	Rotor Nut
39	039 650M	1183228	Crosswind Shaft Assembly
43	043 750M	1183406	Crosswind Block
43A	043A750	1183427	Crosswind Block Plate
44	044 750	1183462	Screw (3) Req.
44A	044 710	1183459	Screw (3) Req.
45	045 650M	1191875	Housing Cover Assembly
46	046 750	1183576	Screw (4) Req.
47	047 650M	1191944	Spool Assembly
48	048 750	1183715	Click Tongue
48A	048A750	1183722	Click Tongue Washer
49	049 710	1183741	Click Tongue Spring
50	050 712	1183766	Bail Spring Cover Screw
51	051 650	1183794	Retaining Ring
52	052 650	1183831	Drag Knob Assembly
56T	056T650	1183917	Drag Washer, Teflon
57	057 650	1183936	Drag Washer, Keyed (2) Req.
58	058 650	1183959	Drag Washer, Octagon (2) Req.
60	060 750M	1192063	Thrust Washer
95B	095B070	1184312	Rotor Locking Plate
98	098 750M	1192202	Clutch Housing
98C	098C750M	1184384	Clutch Bearing and Sleeve
132	132 750M	1184596	Roller Washer
225	225 750	1185007	Crosswind Shaft Bushing
226	226 750M	1192464	Rear Cap
227	227 750M	1192487	Bail Spring Cover
231	231 650M	1185092	Crosswind Gear
233	233 550G	1185145	Bearing Cover
236	236 750M	1192531	Trip Bumper