PARTS LIST FOR MODELS 460 AND 560

REEL ASSEMBLY NOS. 1152050 (460) AND 1152051 (560)

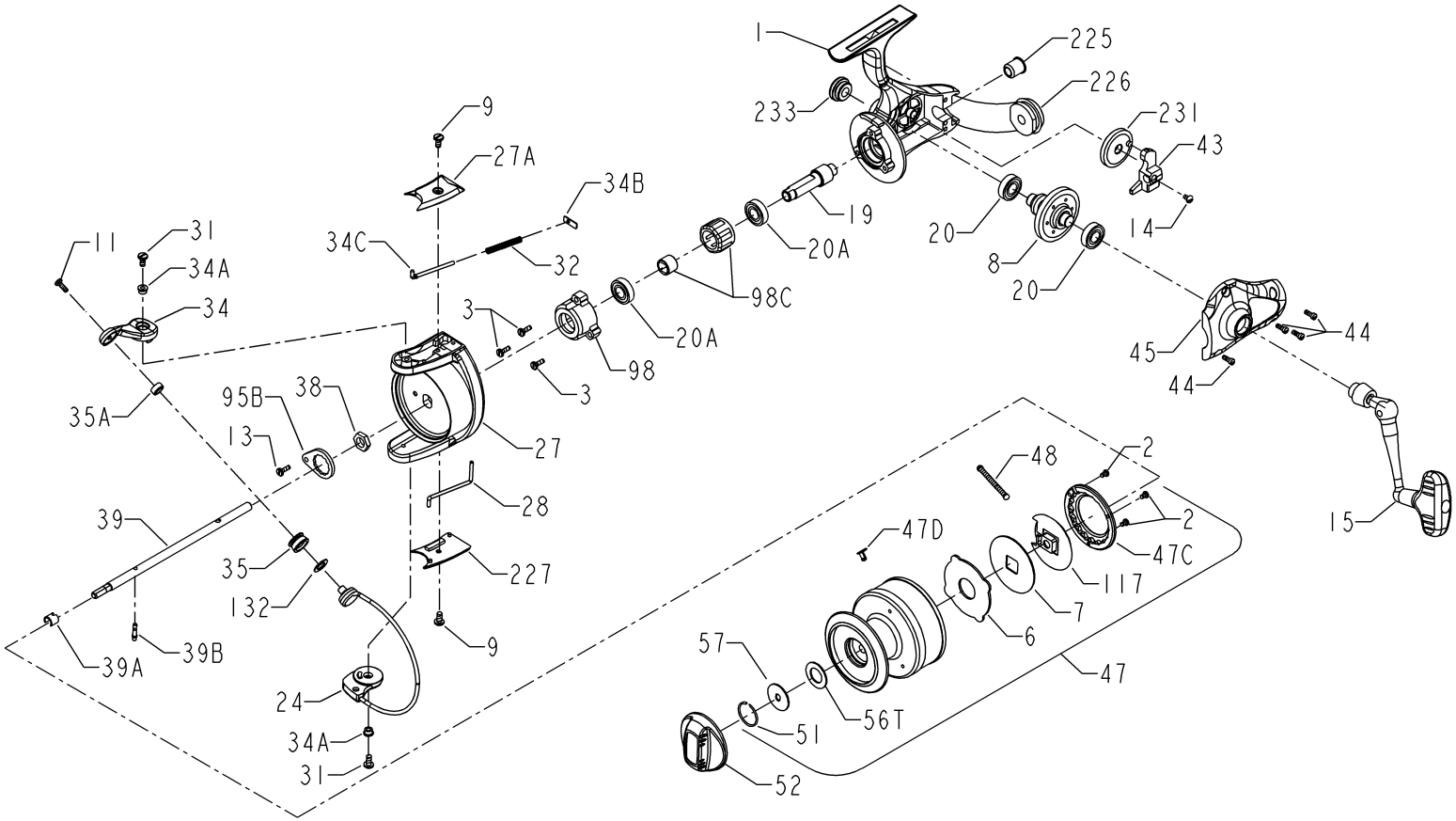

KEY NO.	DESCRIPTION	PENN STYLE NO.	PART NO.
1	Housing Asm	001 460	1180515
1	Housing Asm	001 560	1180530
2	Screw (3 req.)	044 5600	1183455
3	Screw (3 req.)	044 710	1183459
6	Main Drag Washer	006 5600	1180923
7	Keyed Drag Washer	007 5600	1181019
8	Main Gear Asm	008 5600	1181090
9	Screw (2 req.)	022 750	1181922
11	Screw	036 5600	1183011
13	Screw	063A2.5FR	1184057
14	Screw	044 560	1183454
15	Handle Asm (460)	015 460	1181473
15	Handle Asm (560)	015 560	1181483
19	Pinion	019 5600	1181702
20	Ball Bearing (2 req.)	020 722	1181792
20A	Ball Bearing (2 req.)	020 6500	1181789
24	Bail Wire Asm (460)	024 4600	1182039
24	Bail Wire Asm (560)	024 5600	1182049
27	Rotor Cup (460)	027 4600	1182242
27	Rotor Cup (560)	027 5600	1182264
27A	Bail Pivot Cover	027A5600	1182327
28	Trip Lever	028 5600	1182403
31	Screw (2 req.)	036 750	1183016
32	Bail Spring	032 5600	1182732
34	Bail Arm	034 5600	1182823
34A	Rotor Bushing (2 req.)	034A5600	1182846
34B	Pivot Plate	034B5600	1182856
34C	Pivot Arm	034C5600	1182882
35	Line Roller	035 5600	1182933
35A	Ball Bearing	035A706	1182963
38	Rotor Nut	038 5600	1183154
39	Spool Shaft Asm	039 560	1183222
39A	Locating Pin Clip	039A5600	1183247
39B	Locating Pin	039B5600	1183251
43	Crosswind Block	043N560	1183434
44	Screw (4 req.)	039 004CH	1183179
45	Housing Cover Asm	045 460	1183505
45	Housing Cover Asm	045 560	1183512
47	Spool Assembly	047 460	1183641
47	Spool Assembly	047 560	1183649
47C	Drag Cover	047C5600	1183688
47D	Line Clip	047D5600	1183690
48	Click Tongue	048 5600	1183710
51	Retaining Ring	051 650	1183794
52	Drag Knob Assembly	052 560	1183825
56T	Drag Washer (Teflon)	056T650	1183917
57	Drag Washer (Keyed)	057 5600	1183934
95B	Rotor Locking Plate	095B070	1184312
98	Clutch Retainer	098 5600	1184364
98C	Clutch/Sleeve Asm	098C5600	1192217
117	Drive Plate	117 5600	1184487
132	Line Roller Washer	132 5600	1184590
225	Rear Bushing	225 560	1185006
226	Rear Cap	226 560	1185017
227	Bail Trip Cover	227 5600	1185050
231	Crosswind Gear	231N 5600	1185121
233	Bearing Cover Asm	233 560	1185146