PARTS LIST FOR MODEL 330GT2

REEL ASSEMBLY NO. 1152021

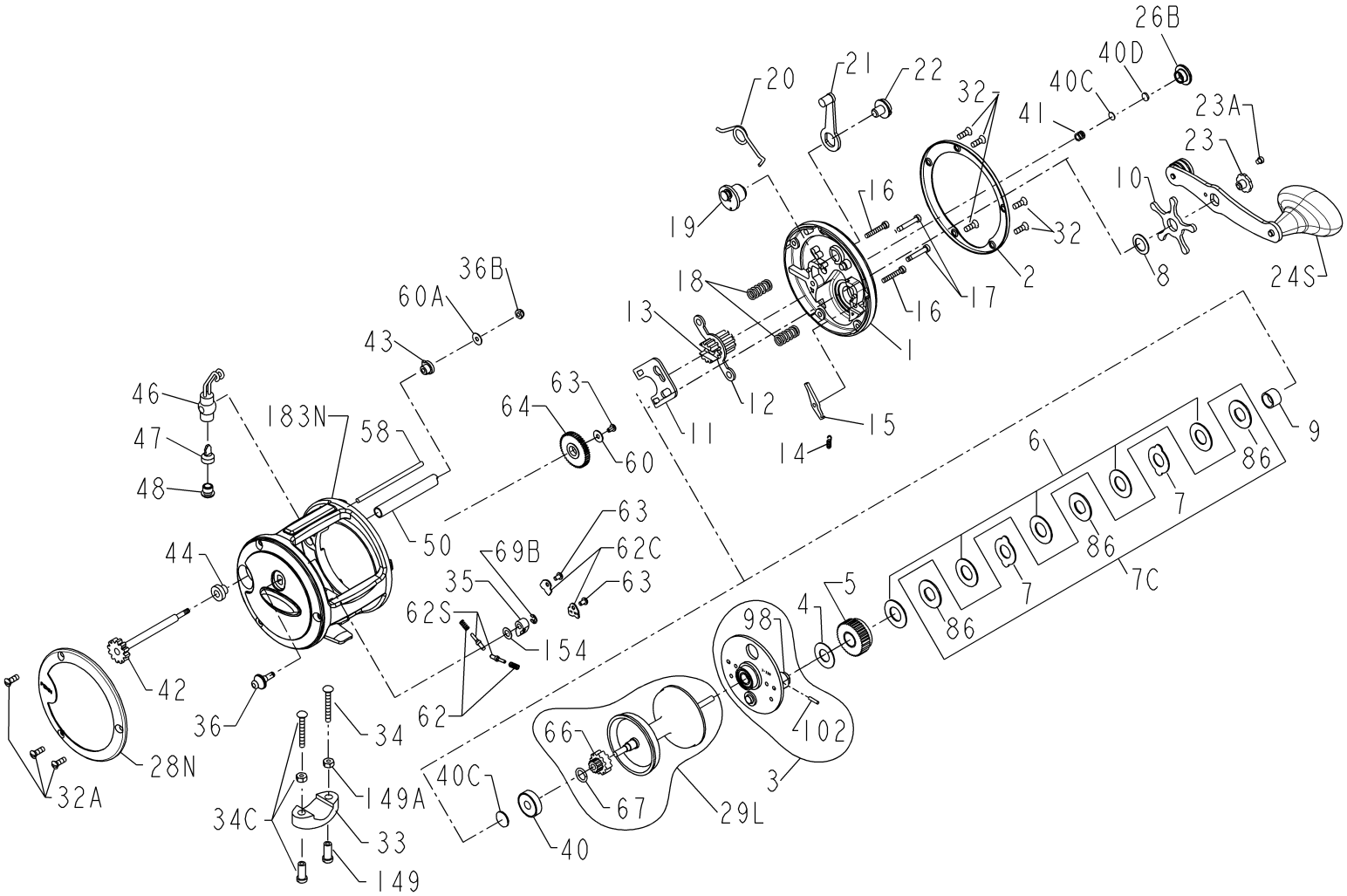

NOTE: NOT ALL PARTS AT THE SAME SCALE

KEY NO.	ORDER PART NO.	ORIGINAL PENN NO.	DESCRIPTION
1	1180496	001 330	Right Side Plate
2	1180640	002 330	Side Ring
3	1180729	003 330	Bridge Assembly
4	1180775	004 349	Fiber Washer
5	1180897	005N320	Main Gear
6	1180918	006 320	Fiber Drag Washer (5 req)
7	1181029	007 970	Drag Washer, Eared (2 req)
7C	1181054	007C970	Drag Washer Kit
8	1181077	008 349	Tension Spring
9	1181158	009 320	Spacing Sleeve
10	1181197	010 349	Star Drag
11	1181244	011 330	Eccentric Jack
12	1181257	012 060	Pinion Yoke
13	1181381	013N330	Pinion Gear
14	1181402	014 330	Dog Spring
15	1181460	015 330	Dog
16	1181570	016 113H	Lower Bridge Screw (2 req.)
17	1181595	017 113H	Upper Bridge Screw (2 req.)
18	1181615	018 060	Clutch Spring (2 req.)
19	1181685	019 330	Eccentric Cam
20	1288917	020 113H2	Eccentric Spring
21	1181861	021 309	Eccentric Lever Assembly
22	1181908	022 060CH	Eccentric Screw
23	1181945	023 114	Handle Assembly Screw
23A	1184437	110 060	Handle Lock Screw
24S	1191341	024S225	Handle Assembly
26B	1182138	026B330	Spool Tension Control Cap
28N	1191513	028N330	Left Side Ring
29L	1182539	029L330	Spool Assembly
32	1182710	032 017	R.S. Plate Screw (5 req.)
32A	1182722	032 310	L.S. Ring Screw (3 req.)
33	1182754	033 113	Rod Clamp
*	*1182783	*033R200	*Ringed Rod Clamp (Optional)
34	1182788	034 045	Clamp Screw Only (2 req.)
34C	1182862	034C045	Clamp Screw Kit
35	1182922	035 310N	Click Tongue
36	1191700	036 330	Click Button
36B	1183014	036 700	Worm Shaft Nut
40	1183280	040 320	Ball Bearing
40C	1183310	040C320	Metal Thrust Washer (2 req.)
40D	1183317	040D320	Rubber Thrust Washer
41	1183336	041 330	Right Side Thrust Spring
42	1183351	042 330N	Worm Assembly
43	1183384	043 330	Right Side Worm Bearing
44	1183446	044 330	Left Side Worm Bearing
46	1183563	046 330N	Line Guide Carriage
47	1183677	047 975	Pawl
48	1183704	048 330N	Pawl Cover Screw
50	1191973	050T330	Worm Shield
58	1183955	058 330	Line Guide Post
60	1183991	060 320	Idler Gear Washer
60A	1183991	060 320	Worm Gear Washer
62	1184033	062A310	Click Spring (2 req.)
62C	1184041	062C321LH	Click Spring Cover (2 req.)
62S	1192075	062S310	Click Pin (2 req.)
63	1184052	063 500S	Idler Gear Screw (3 req.)
64	1184067	064 330	Idler Gear
66	1184093	066 320	Spool Gear Click Ratchet
67	1184102	067 009	Spool Gear Lock Ring
69B	1184129	069B600	Click Button Retaining Ring
86	1184270	086 970	Drag Washer, Keyed (3 req)
98	1184349	098 320	Gear Sleeve
102	1192230	102 113	Gear Sleeve Pin
149	1184702	149 045	Clamp Nut Only (2 req.)
149A	1184706	149 200	Hex Nut Only (2 req.)
154	1184721	154 117	Click Button Washer
183N	1192435	183N330	Frame Assembly

*Not Shown